400 SERIES CONSOLE SIREN ROTARY OR PUSH-BUTTON USER INTERFACE

ENGSCP7141 - 100W
ENGSCP7152 - 200W
ENGSCR7141 - 100W
ENGSCR7152 - 200W

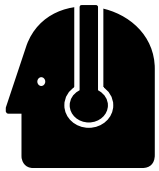

⚠ WARNING

Sirens produce loud sounds that may damage hearing:
- **Roll up windows.**
- **Wear hearing protection.**
- **Use only for emergency response.**
- **Avoid exposure to siren sound outside of vehicle.**

PUSH BUTTON

ENGSCP7141 - 100W
ENGSCP7152 - 200W

ROTARY

ENGSCR7141 - 100W
ENGSCR7152 - 200W

Introduction

The ETSA48(1,2)CS(R,P) is a console (DASH) mounted all in one siren and light controller. It comes in 4 styles differing in the user interface method and the amount of speaker power available. This siren can also drive a variety of programmable powered control lines capable of up to nine 10A and three 20A circuits.

Notice

Sirens provide an essential function of an effective audio / visual warning system. However, sirens are only short range secondary devices. The use of a siren does not insure that all drivers can or will abide by or react to an emergency warning signal, especially at high rates of speeds or long distances. The operator of the vehicle must never take the right of way for granted and it is the operator's responsibility to proceed safely.

The effectiveness of this siren system is highly dependant on the correct mounting and wiring. The installer must read and follow the manufacturer's installation instructions and warnings in the manual. The vehicle operator should verify the siren system is securely fastened to the vehicle and properly functioning.

Effective sirens generate loud sound pressure levels that can potentially cause hearing damage. Installers and those around the vehicle need to be aware of the dangers and wear hearing protection whenever the siren system is operating. Vehicle operators and occupants should assess their exposure to siren noise and determine what steps need to be taken to prevent hearing damage.

The siren system is intended for use by authorized personnel only. It is the user's responsibility to ensure they understand and operate the emergency warning devices in compliance with all applicable city, state, and federal laws and regulations. SoundOff Signal assumes no liability for any loss resulting from the use of the siren system.

⚠ WARNING

Please see page 3 for Technical Specifications

- HIGH CURRENT interconnects must be properly terminated. Poor crimp quality can cause heat build-up and fire. Follow crimp connector manufacturer instructions.
- DO NOT install this product or route any wires in the Air Bag Deployment Zone. Refer to vehicle Owner's Manual for deployment zones.
- Do NOT use system to disconnect headlights, brake lights or other safety equipment.
- Unit may become hot to touch during normal operation.
- Failure to properly install connectors, fuses or wiring may cause vehicle failure or fire.
- Installation must only be performed by trained technician. Installer must determine vehicle wiring configuration and proper integration of system.
- Use proper wire gauge. All power wires connecting to positive (+) or negative (-) battery terminal or local chassis ground (-) must be sized to supply at least 125% of max. current and properly fused at power source.
- Install protective grommets when routing wire through firewall or metal.

Package Contents:

1 ea. Console Siren
4 ea. Amplifier Wire Harnesses with Connectors (1-4 pin, 1-12 pin, 1-5 pin and 1-14 pin)
1 ea. Instruction Manual
1 ea. Operators Warning Card to remain in vehicle for operator review
1 ea. Sound Pressure Warning Label that is to be attached in vehicle and in plain site of operator and occupants of the vehicle
1 ea. Mounting Bracket with Hardware
1 ea. Label Card for Aux. Switches

IMPORTANT NOTICE TO INSTALLER:

Make sure to read and understand all instructions and warnings before proceeding with the installation of this product. Ensure the manual and all warning cards are delivered to the end user of this equipment.

NOTICE:

Installers and users must comply with all applicable federal, state and local laws regarding use and installation of warning devices.

Improper use or installation may void warranty coverage.
To review our Limited Warranty Statement & Return Policy for this or any SoundOff Signal product, visit our website at ***www.soundoffsignal.com/tech-services/returns/****.*
If you have questions regarding this product, contact ***Technical Services****, Monday - Friday, 8 a.m. to 5 p.m. or after hours 5 p.m. to 8 p.m. ET at* ***1.800.338.7337*** *(press #4).*
Questions or comments that do not require immediate attention may be emailed to ***techservices@soundoffsignal.com.***

SoundOff Signal®

1.800.338.7337 / www.soundoffsignal.com

SUPERIOR CUSTOMER RELATIONSHIPS. SMARTLY DESIGNED LIGHTING & ELECTRONIC SOLUTIONS.

ENGSC(x)(xxxx) 0419

400 SERIES CONSOLE SIREN ROTARY OR PUSH-BUTTON USER INTERFACE

ENGSCP7141 - 100W
ENGSCP7152 - 200W
ENGSCR7141 - 100W
ENGSCR7152 - 200W

REPLACEMENT PARTS & ACCESSORIES

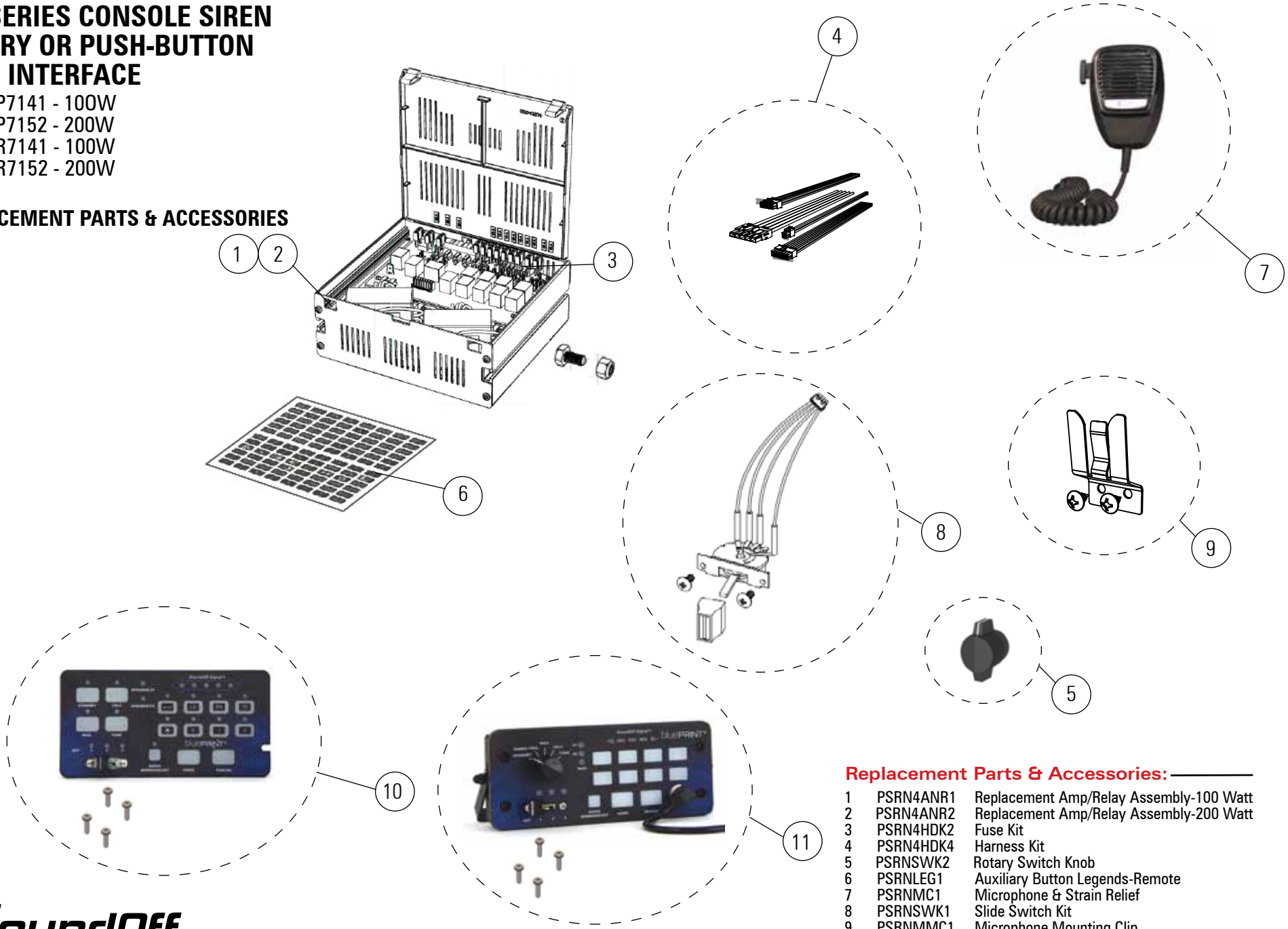

Replacement Parts & Accessories:

1	PSRN4ANR1	Replacement Amp/Relay Assembly-100 Watt
2	PSRN4ANR2	Replacement Amp/Relay Assembly-200 Watt
3	PSRN4HDK2	Fuse Kit
4	PSRN4HDK4	Harness Kit
5	PSRNSWK2	Rotary Switch Knob
6	PSRNLEG1	Auxiliary Button Legends-Remote
7	PSRNMC1	Microphone & Strain Relief
8	PSRNSWK1	Slide Switch Kit
9	PSRNMMC1	Microphone Mounting Clip
10	PNGCP18003	Push Button Control Panel
11	PNGCP18004	Rotary Switch Control Panel

1.800.338.7337 / www.soundoffsignal.com

400 SERIES AMPLIFIER BOX

PSRN4ANR1
PSRN4ANR2

Operating Modes

The primary operating modes are User Selectable Tone, Yelp, Wail, Radio, PA, Horn Override, and a push-button Manual Override are available in all modes. All tones except Wail and Yelp for California Title 13 compliance may be disabled by programming the siren.

⚠ WARNING

Do not install this product or route its wires in the air bag deployment area.

Doing so may cause damage to or reduce effectiveness of the air bag, or create projectile that could cause serious injury or death.

To determine air bag deployment area refer to vehicle manufacturer's manual.

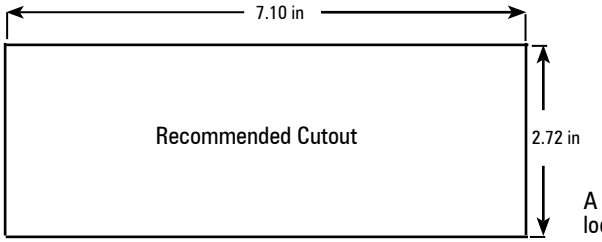

MOUNTING

-Siren Installation-

Siren must be mounted using fasteners in the side t-slots. Before drilling holes, check for clearance to prevent damage. Check both sides of the mounting surface before drilling and the be aware of any vehicle components or other vital parts that may be damaged during drilling. Choose a location with adequate air flow as this unit gets warm and relys on cool air. Install grommets in any wire passage holes.

1. Slide ¼" hex head bolts into siren amplifier t-slots.
2. Thread ¼" lock nuts onto bolts and tighten to secure siren unit to intended receiver.
3. Install amplifier with clearance from other objects for improved ventilation.

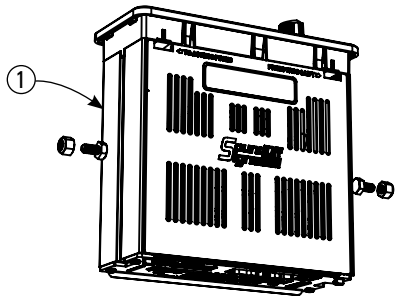

-Microphone Bracket Installation-

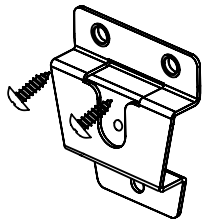

A metal clip is provided for mounting the microphone. Choose a location convenient to the operator and away from any air bag deployment areas. Using the mounting clip as a template, mark the two holes to be drilled. Using a 1/8" drill bit, drill the two mounting holes. Install the two #8 screws provided with the bracket.

WIRING:

WARNING! All customer supplied wires connecting to the positive terminal of the battery must be sized to supply at least 125% of the maximum operating current and FUSED at the battery to carry that load.

Ensure the siren amplifier / relay unit is mounted in dry, protected environment.

TECHNICAL SPECIFICATIONS

Overall Dimensions: Control Panel: Amplifier/Relay:	 3.51" W x 6.89"H x 1.17"D 2.62"H x 7.00"W x 6.51"D
Input Voltage:	10 - 16Vdc (negative ground)
Boxed Weight:	8 lbs.
Operating Temperature:	-40°C to +50°C
Diagnostic LEDs:	Speaker shorted/open, internal fuses open, communications faults
Siren	
Input Current	7 Amps @ 13.4 VDC (100W Speaker) 14 Amps @ 13.4 VDC (2 x 100W speakers)
Standby Current: Ignition ON: Ignition OFF:	 500mA <10mA
Output Power:	ETSA481: 1x100W RMS Max (11 Ohm speaker) ETSA482: 2x100W RMS Max (11 Ohm speaker)
Audio Frequency:	500-3 kHz
Siren Frequency:	675Hz - 1633Hz
High Voltage Protection:	Limits to <18V If siren tone is in progress, sound will continue during overvoltage. New siren tone will not activate if voltage is >18V
Low Voltage Shutdown::	Voltage<9.0V will cause siren output to cease and will resume when system voltage is >9.5V
	Tone disable for California Title 13 compliance
	Auxiliary Input connection for remote manual or Hands Free operation
Speaker Protection:	Shorted, Open: Stop output signal, preserve Amp
Light Control	
AUX button relays:	9 total 10A max each circuit Total current not to exceed 50A for CN8 pin 5
	2 of the 9 available for external Arrow control
	2 of the 9 have their source voltage switchable from internal to external via fuse location, see pg 5
Slide Switch Relays:	3 total 20A max each circuit, Total current not to exceed 50A for CN8 pin 4

SoundOff Signal®

1.800.338.7337 / www.soundoffsignal.com

400 SERIES AMPLIFIER BOX

PSRN4ANR1
PSRN4ANR2

SIREN AUDIO WIRING

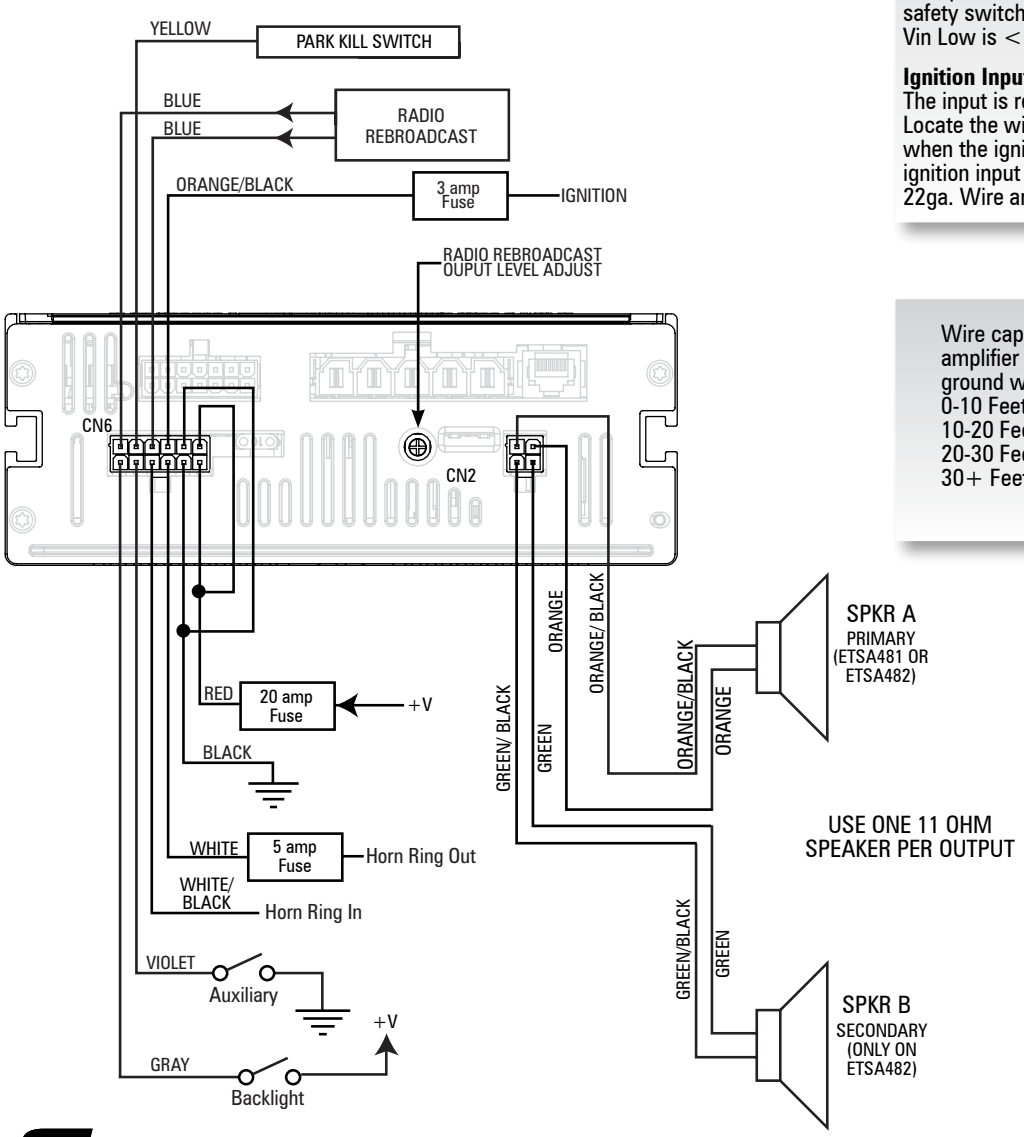

Park Kill Input: (Yellow Wire)
The input will silence the siren tone when the input wire is activated. The input is typically connected to the transmission neutral safety switch. If this feature is required, the installer needs to determine if the signal wire from the neutral safety switch is switching the +V or ground side of the circuit. Refer to the programming instructions on how to set the park kill polarity on the siren. Extend the park kill input wire from the siren amplifier to the neutral safety switch using a minimum 22ga. Wire. Park kill Vin Low is < 5Vdc.

Ignition Input: (Orange/Black Wire)
The input is required to enable the siren system. Locate the wire on the vehicle which provides +V when the ignition switch is turned ON. Extend the ignition input wire as needed using a minimum of 22ga. Wire and tap into the vehicle ignition wire.

Wire capacity requirements for siren amplifier (incoming power)-each supply and ground wire.

0-10 Feet:	14 AWG
10-20 Feet:	12 AWG
20-30 Feet:	10 AWG
30+ Feet:	Consult Factory to determine requirements

Auxiliary Input: (Violet Wire)
The input is an optional input which will remotely activate the siren when the auxiliary input wire is connected to ground. If this feature is needed, connect the auxiliary input wire to a switch which provides a ground connection when activated. *Park kill disables any active auxiliary tone. The auxiliary tone can be reactivated when Park Kill is activated by toggling the Auxiliary Input.

Radio Rebroadcast Input: (Blue Wires)
The 2 – 18ga blue wires on the 12 pin Molex connector are used to connect your two-way radio's external speaker through the siren amplifier and broadcast through the warning siren speaker and is optional. Radio Rebroadcast will not work with remotely amplified speakers due to the signal amplitude being too low. Locate the 2 wires that connect the external speaker to the two-way radio. T-tap one blue wire into one of the external speaker wires. T-tap the other blue wire into the other external speaker wire. If the blue wires need to be extended, use a minimum of 20ga. Wire. The Radio Rebroadcast volume must be adjusted prior to placing vehicle into service. Set the volume of the two-way radio to the normal operating level. Press the Radio Rebroadcast push-button on the siren control panel. With a small screwdriver, adjust the radio rebroadcast volume potentiometer located on the back of the siren amplifier to obtain the proper volume out the speaker. Turn potentiometer clockwise to increase volume and counter-clockwise to decrease volume.

Horn Ring Input: (White + White/Black Wire)
The input will allow the operator to control the siren function by pressing the vehicle horn ring. Refer to programming settings for specific configuration options. Refer to wiring diagram for details on how to connect the horn ring input wires to the vehicle's horn ring wiring. If this feature is required, the installer needs to determine if the signal wire from the horn ring is switching the +V or ground side of the circuit. Refer to programming instructions on how to set the horn ring polarity on the siren. Extend the horn ring input wires from the siren amplifier to the horn ring switch using a minimum of 18ga wire. The horn ring circuit is capable of handling a maximum of 5 amps and must be fused by the installer.

Siren Speaker Output: (Orange + Orange/Black Wires), (Green + Green/Black wires) Route the Orange and Orange/Black wires from the 4 pin connector to the siren speaker. Use a minimum of 18ga. wire to extend the wires as needed. Connect the Orange wire to the primary Speaker High wire. Connect the Orange/Black wire to the primary Speaker Low wire. For ETSA482 only connect the Green wire to the secondary Speaker High Wire. Connect the Green/Black wire to the secondary Speaker Low Wire.

Backlight Input: (Gray Wire)
The input will turn on the backlighting of the control panel whenever +V is applied to the backlight input wire. Route the siren amplifier backlight input wire to the vehicle's marker light wiring using a minimum of 22ga. wire to extend as needed. T-tap the backlight input wire into the vehicle's marker light +V wire.

400 SERIES AMPLIFIER BOX

PSRN4ANR1
PSRN4ANR2

POWERED OUTPUT WIRING

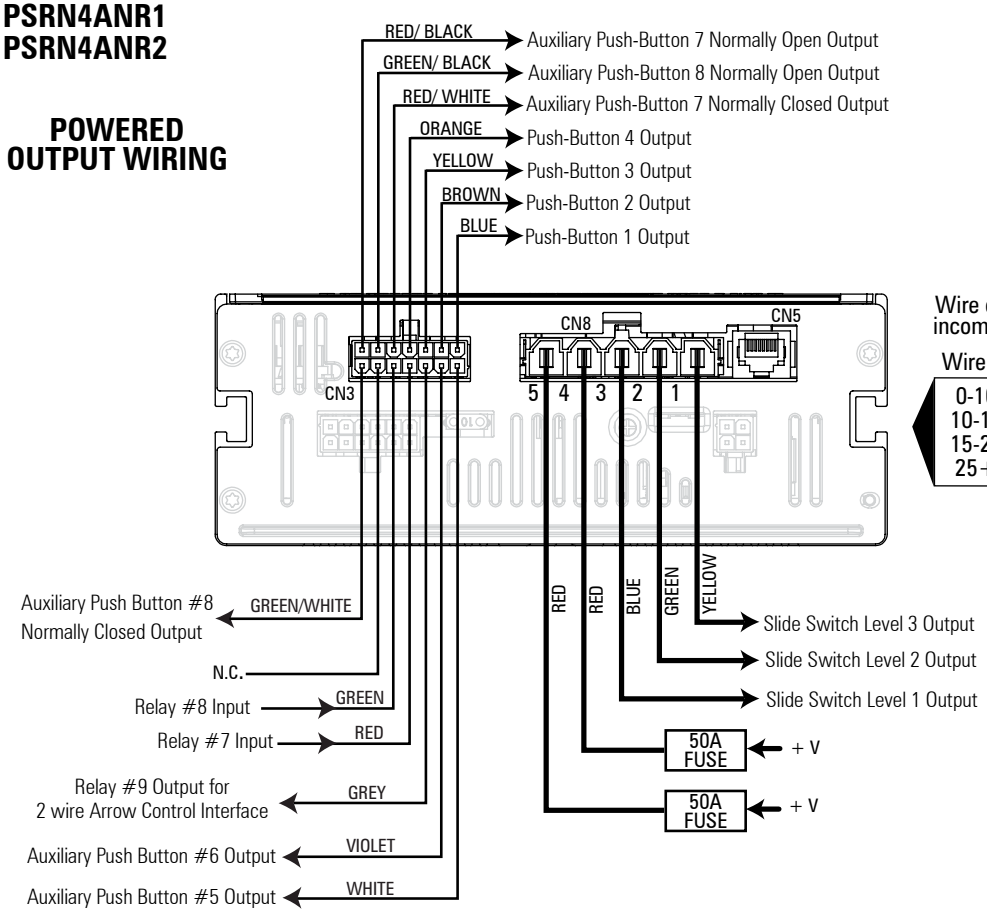

Wire capacity requirements for Relay incoming power supply for each wire

Wire Length	Minimum Wire Gauge
0-10 Feet	10 AWG
10-15 Feet	8 AWG
15-25 Feet	6 AWG
25+ Feet	Consult Factory

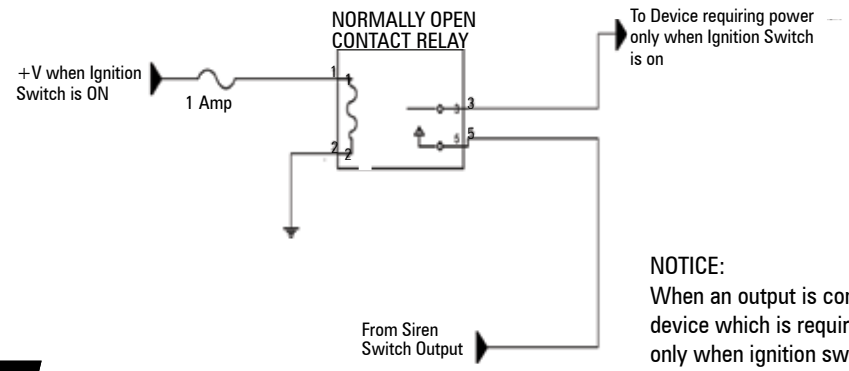

NOTICE:
When an output is connected to a device which is required to function only when ignition switch is ON, a relay needs to be installed in-line with the siren switch output to ensure an operator can't activate the device without the ignition switch ON.
See wiring diagram details:

Internal Relay Board Fuse replacement:

To replace fuses:

1. Remove power connectors CN8 and CN6 or remove power to unit.
2. Remove unit from console or obtain access to full top of unit.
3. Depress snaps on top cover and lift open.
4. See chart below for output fuse locations and ratings.
5. Fuse Ratings: Replace with same rated part.
6. Close cover, reinstall connectors and reinstall unit in console.

The button outputs 7 and 8 have the ability to receive power from an independent external power source or from the internal +V as supplied to CN8. Both of these outputs use a separate internal 10A mini-ATO fuse which rely on position to determine the source selection. Each fuse may be placed in one of 2 locations. See diagram below.

* If the fuse is placed in the fuse holder near the back edge of the PCB that output will be powered from an external source, labeled "relay #(x) input" on CN3.

** If the fuse is placed in the fuse holder away from the back edge of the PCB that output will be powered from the internal +V source that comes from CN8 pin 5.

FUSE CHART

LOCATION	RATING
FB-8	10A
FB-7	10A
FB-4	10A
FB-3	10A
FB-2	10A
FB-1	10A
FB-5	10A
FB-6	10A
FB-9	10A
FS-1	20A
FS-2	20A
FS-3	20A

FUSE LOCATIONS ON RELAY PCB

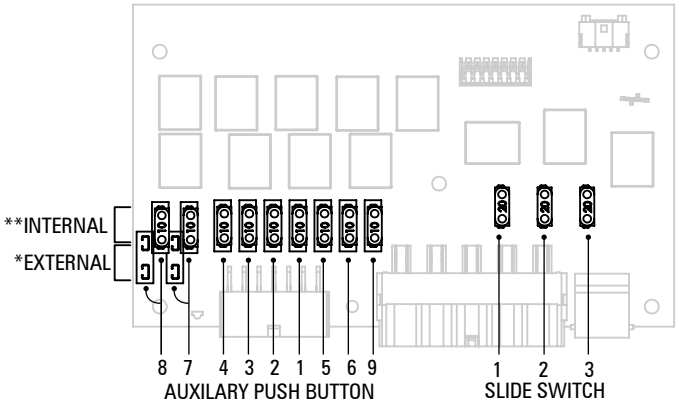

Slide Switch Level Outputs 1-3 and Button Outputs 1-6 are active high (vehicle supply level).

1.800.338.7337 / www.soundoffsignal.com

ENGSC(x)(xxxx) 0419

CONTROL PANEL
PNGCP18003
PNGCP18004
PROGRAMMING MANUAL

PUSH BUTTON (SHOWN BELOW) SIMILAR TO ROTARY SWITCH (NOT SHOWN)

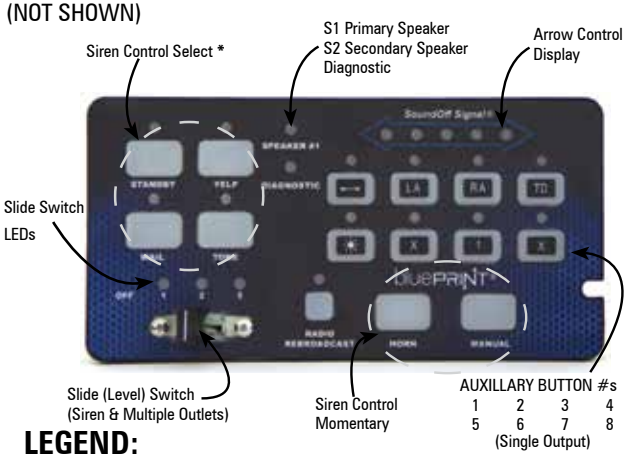

LEGEND:

☐ **ON - GREEN**

☐ **OFF - BACKLIGHT ON - RED**
BACKLIGHT OFF - OFF

☒ **NOT APPLICABLE**

GRAYED AREAS DENOTE FACTORY DEFAULTS

NOTE:

A. For All programming modes: Momentarily depress Radio Rebroadcast push-button to exit.

B. To hear samples of all the tones available go to www.soundoffsignal.com website.

C. The Push Button version (shown above) works the same as the rotary switch version with 2 exceptions:
1. **Gun Release Interlock (Button:STBY; Rotary: RR)**
2. **Rotary Switch version only - Parasidic Current- To place unit in lowest possible current consumption mode (with ignition off), rotary switch must be in "off" position.**

*** Siren Control Select for push button or rotary switch versions program the same.**

1.800.338.7337 / www.soundoffsignal.com

Modes	Horn Ring Configuration Settings *Siren Tone Must Be ON*			
	Hornring Scroll	Hornring Latch (see #4 in OTHER MODES on pg. 7.)	Hornring Timeout	**Output Behavior**
Scroll	ON	X	OFF	Pressing the horn in this mode will advance to and latch the next priority tone. (W->Y->T->W...). The tone is cancelled by pressing the control panel stanyby or siren tone buttons.
Scroll	ON	X	ON	Same as above with the added feature of the tone being cancelled 8 seconds after the horn is released.
Latch/Toggle	OFF	ON	OFF	Pressing the horn in this mode will toggle between the current control panel tone and the next priority tone. If the tone can not transfer to a higher priority tone, the airhorn will sound while the horn is pressed.
Latch/Toggle	OFF	ON	ON	Same as above with the added feature of the tone being cancelled 8 seconds after the horn is released.
Momentary	OFF	OFF	OFF	Pressing the horn in this mode will momentarily play the next priority tone while the horn is held.
Momentary	OFF	OFF	ON	Same as above with the added feature of the tone being cancelled 8 seconds after the horn is released.

INPUT SETTINGS:

1. Press and Hold Auxiliary Button 1 and 3 until slide switch #3 LED flashes.

1. Park Kill Polarity Mode: Determines what voltage level will activate park kill functions.

☐ ☒ ☒ ☒ — ON = activated when +V is applied to Park Kill input wire.

☒ ☒ ☒ ☒ — OFF = activated when Ground is applied to Park Kill input wire.

2. Horn Ring Polarity Mode: Determines what voltage level will activate Horn Ring functions.

☒ ☐ ☒ ☒ — ON = activated when +V is applied to Horn Ring input wire

☒ ☒ ☒ ☒ — OFF = activated when Ground is applied to Horn Ring input wire

3. Tone Select*: Determines if the Tone Select activation will allow a siren tone to be produced.

☒ ☒ ☐ ☒ — ON = Tone Push-button Enabled

☒ ☒ ☒ ☒ — OFF = Tone Push-button Disabled

4. Level 3 tone activation*: Determines when the siren tone push-buttons on control panel are enabled.

☒ ☒ ☒ ☐ — ON = Tone push-buttons always enabled

☒ ☒ ☒ ☒ — OFF = Tone push-buttons only enabled when slide switch is in position #3.

5. Horn Ring Timeout: (Alternate Horn Ring control must be disabled for function to have any effect). When vehicle horn is pressed and tone changes, determines how tone will change back to pre-vehicle horn press tone. This feature can be applied to scroll and latch modes. (See Horn Ring Table).

☒ ☒ ☒ ☒ — ON = siren tone will revert back to pre-vehicle horn press tone after 8 seconds

☐ ☒ ☒ ☒ — OFF = siren tone will not revert back to pre-vehicle horn press tone

6. Park Kill Latch: When Park Kill input is triggered, determines how siren tone proceeds once park kill input is no longer active. (Disables Auxiliary Input)

☒ ☒ ☒ ☒ — ON = Tone remains disabled until operator selects other tone

☒ ☐ ☒ ☒ — OFF = Tone resumes once Park Kill input is no longer active

7. Horn Ring Scroll: Determines how siren tone will change each time the operator presses the vehicle horn. (See Horn Ring Table).

☒ ☒ ☒ ☒ — ON = Tone will advance through tones programmed on Wail, Yelp, and Tone push-buttons each time vehicle horn is pressed. ***Only if a tone is already active.**

☒ ☒ ☐ ☒ — OFF =Tone will toggle between control panel tone and next priority tone. If tone can not transfer to higher priority tone, Airhorn will momentarily play

8. Auxiliary Input: Determines which siren tone will be activated when auxiliary input is activated.

☒ ☒ ☒ ☒ — ON = Air Horn tone

☒ ☒ ☒ ☐ — OFF = Tone which is programmed on Wail push-button

CONTROL PANEL
PNGCP18003
PNGCP18004
PROGRAMMING MANUAL

SLIDE SWITCH SETTINGS:

1. Press and hold Auxiliary Push-Button "1" and "4" until slide switch #2 indicator LED flashes.
2. Press Auxiliary Push-Button "1", "2" or "3" depending on which configuration for the slide switch is required.

SLIDE SWITCH SETTINGS

MODE		RELAY OUTPUT #1	RELAY OUTPUT #2	RELAY OUTPUT #3	SLIDE SWITCH POSITION
1	AUXILIARY PUSH-BUTTON 1 IS SELECTED	✓			1
		✓	✓		2
		✓	✓	✓	3
2	AUXILIARY PUSH-BUTTON 2 IS SELECTED	✓			1
			✓		2
				✓	3
3	AUXILIARY PUSH-BUTTON 3 IS SELECTED	✓			1
			✓		2
		✓	✓	✓	3

Setting PA Volume:

1. Press and Hold Auxiliary Push-Button "1" and "2" until slide switch #2 and #3 indicator LED flashes.
2. Depress and hold PA switch on microphone and press Push-Button "1"-"8" depending on volume required. When correct volume is determined, press Radio Rebroadcast and the volume setting will be permanently stored.

LOW | 2 | 3 | 4

5 | 6 | 7 | HIGH

BACKLIGHT INTENSITY:

While pressing RADIO REBROADCAST BUTTON,
press Auxiliary Push-Button "1"-"8" to adjust backlight intensity.
"1" = Lowest intensity, "8" = Highest intensity.
Backlight must be enabled by the Gray wire on CN6.

1.800.338.7337 / www.soundoffsignal.com

ALTERNATE MODES:

1. Press and Hold Auxiliary Push-Button "2" and "6" until Slide Switch indicator #1 and #2 LED flashes.

1. Alternate Horn Ring control: Custom operation of vehicle horn when pressed. Refer to figure below for details.

☐ ☒ ☒ ☒ ON = Enabled

☒ ☒ ☒ ☒ OFF = Disabled

2. Alternate Horn Ring control option: (Alternate Horn Ring Control must be enabled). Custom operation of vehicle horn when pressed. Refer to figure below for details.

☒ ☐ ☒ ☒ ON = Option 2

☒ ☒ ☒ ☒ OFF = Option 1

	ALTERNATE HORN RING CONTROL		
	OPTION 1	**OPTION 2**	
STANDBY	OEM HORN	OEM HORN	
LEVEL 1	OEM HORN	OEM HORN	
LEVEL 2	Air Horn or Wail Button Tone while Pressed *	Tap to Turn On Warning Tone, Tap again to Change Warning Tone. Press and Hold for Air Horn Tone	
LEVEL 3	Tap to turn ON Warning Tone, Tap again to change Warning Tone. Press and Hold for Air Horn Tone	**TONE SWITCH OFF:** Air Horn Tone or Wail Button Tone while Pressed *	**TONE SWITCH ON:** Tap to change Warning Tone, Press and Hold for Air Horn Tone

* Set in "Other Modes" 6. Horn Ring Standby Tone

3. GUN LOCK SECURITY:

☒ ☒ ☐ ☒ ON = Operator must press Standby button within 1 second after pressing 8 second time delay button to active switch

☒ ☒ ☒ ☒ OFF = 8 second time delay switch is activated immediately when pressed

6.DISABLE RELAY ERROR FOR AUX 7 & 8:

☒ ☒ ☒ ☒ ON = Disable fault detect indication for Aux relays 7& 8.

☒ ☐ ☒ ☒ OFF = Fault detect normal.

7. Slide Switch Enabled Without Ignition: After ignition is turned off, device will stay on in lower power mode and allow (ONLY) the slider to operate.

☒ ☒ ☒ ☒ ON = With ignition off, slider relays will still turn on if slider is in position 1, 2, or 3.

☒ ☒ ☐ ☒ OFF =Device turns off normally, sliders will not work when off.

8. Invert Backlight Color: Swap the background and active colors of buttons.

ON = Backlight color is green, active is red.

OFF = Backlight color is red, active is green.

OTHER MODES:

Press and Hold Auxiliary Button "1" and "5" until slide switch #1 and #3 indicator LED flashes.

1. Horn Ring Activation: Determines when pressing the Vehicle Horn will activate siren tone

☐ ☒ ☒ ☒ ON = Enabled whenever siren is ON

☒ ☒ ☒ ☒ OFF = Enabled only when slide switch is in level position 3

2. Buzzer: Audible tone from control panel whenever operator presses push-button or changes position of slide/rotary switch

☒ ☐ ☒ ☒ ON = Buzzer enabled

☒ ☒ ☒ ☒ OFF = Buzzer disabled

3. Speakers Diag LED disable: Disabling Diagnostic LED does not turn off secondary speaker channel

☒ ☒ ☐ ☒ ON enable Diagnostic LED (200W)

☒ ☒ ☒ ☒ OFF disable Diagnostic LED (100W)

4. Horn Ring Latch Mode: (Alternate Horn Ring Control Must be Disabled) Activates the siren tone per scroll mode off settings when operator momentarily presses on Vehicle Horn. *Wail Only. Only works when tone is already active. (See Horn Ring Table).

☒ ☒ ☒ ☐ ON = Horn ring Toggle Switch Mode

☒ ☒ ☒ ☒ OFF = Horn ring Momentary Switch Mode

CONTROL PANEL
PNGCP18003
PNGCP18004
PROGRAMMING MANUAL

OTHER MODES CONTINUED:

5. Power Down: Determines siren operation after ignition wire input has no voltage

☒☒☒☒ ON = Timed Power Down: Siren will power down 10 min. after last activity.

☐☒☒☒ OFF = Immediate Power Down: Siren will power down immediately after ignition is turned off.

6. Horn Ring Standby Tone: (Alternate Horn Ring Control Must be Disabled) Determines which tone to output when siren is in standby and vehicle horn is pressed

☒☒☒☒ ON = Air Horn Tone

☒☐☒☒ OFF = Manual Button Tone

7. 8 Second Buzzer Alert: Provides audible beep every 8 seconds whenever any auxiliary switches are ON or level 1,2, or 3 is active.

☒☒☒☒ ON = Enabled

☒☒☐☒ OFF = Disabled

8. Air Horn Button Output Channels

☒☒☒☒ ON = In standby mode, Horn tone is output on Spkr A & B. When Warning Tone is Active, Warning Tone continues on Spkr A & Air Horn Button Tone is output on Spkr B.

☒☒☒☐

OFF = Horn Button Tone always produced on Spkr A & B.

PROGRAMMING MODES

AUXILIARY SWITCH SETTINGS:

Refer to Siren Amplifier Diagnostic Indicator Chart below for Button and LED locations and terminology

1. Press and Hold Auxiliary Button #1 and #8 until slide switch #1 LED flashes.

2. Press the button which setting is going to be viewed/changed 1 time.

3. Monitor the 5 LED's for the arrow controller to determine setting

⦿○○○○- *Arrow Controller (Left, Right, Center, OFF), Dual Output; 1 & 9
○⦿○○○- Alternate Action Switch (Press ON / Press OFF)
⦿⦿○○○- Momentary Action Switch (ON only when depressed)
○○⦿○○- 8 Second ON Time (ON for 8 seconds when depressed)
⦿○⦿○○- Level 1 Disable (Turns OFF Level 1 Output)
○⦿⦿○○- Level 2 Disable (Turns OFF Level 2 Output)
⦿⦿⦿○○- Left Arrow, Single Output
○○○⦿○- Right Arrow, Single Output
⦿○○⦿○- Center Arrow, Single Output
○⦿○⦿○- Warning Bar Output

*Can only be programmed to one button and will disable Left, Right and Center Arrow Single Outputs if they are used.

4. Press and release button until desired mode is selected.

5. Continue steps 2-3 for any other buttons that need to be programmed.

Default Settings:
Button #1: Arrow Controller
Button #2-7: Alternate Action Switch
Button #8: 8 Second ON Time

Denotes Factory Default Setting

SIREN AMPLIFIER DIAGNOSTIC INDICATORS:

* SIREN AUDIO BUTTON ACTIVATED (EXCEPT RADIO REBROADCAST)

DIAG	S1	S2	CONDITION
FLASHING	OFF	ON	UNDER-VOLTAGE
FLASHING	ON	OFF	OVER-VOLTAGE
FLASHING	FLASHING	-	COMM FAULT - RELAY
FLASHING	-	FLASHING	COMM FAULT - AMP
FLASHING	FLASHING	FLASHING	COMM FAULT -RELAY AND AMP
-	-	-	-
*OFF	ON	-	SPKR 1 IS ACTIVE
*OFF	-	ON	SPKR 2 IS ACTIVE
*OFF	OFF	-	SPKR 1 IS NOT-FUNCTIONING
*OFF	-	OFF	SPKR 2 IS NOT-FUNCTIONING

Slide switch mapping programming:
Allows the operator to have the siren automatically turn on auxiliary push-buttons or tones based on the position of the slide switch.

If an auxiliary or tone push-button is programmed to turn ON when the slide switch position is selected, the auxiliary push-button will turn OFF when the programmed slide switch position is no longer selected.

The operator can override the automatic activation of the auxiliary push-button by momentarily pressing the auxiliary push-button.

To program:

1. Press auxiliary push-buttons '4' and '5' for until Radio Rebroadcast indicator LED flashes.

2. Move slide switch to desired position.

3. Press auxiliary push-buttons '1' – '8' and or Siren Control Select as required.

LED ON (GREEN)	Auxiliary push-button or Siren Control Select will automatically turn ON when level switch position is activated.
LED OFF (RED OR OFF)	Auxiliary push-button or Siren Control Select will NOT automatically turn ON when level switch position is activated.

4. Repeat steps 2 and 3 for other slide switch positions as required.

5. Place appropriate button legend over activity indicator for each programmed button.

CONTROL PANEL
PNGCP18003
PNGCP18004
PROGRAMMING MANUAL

PARK KILL SETTINGS: Enables auxiliary and slider outputs to be disabled when Park Kill input is active. Auxiliary outputs can be turned back on by pushing the buttons again; slider outputs are disabled as long as the Park Kill input is active.

1. Push and hold Auxiliary Push-Buttons 2 & 3 until arrow indicator LEDs flash.
2. Press Push-Buttons 1-8 to toggle whether that auxiliary output will turn off when Park Kill input becomes active. LED on means output will turn off.
3. Move slider switch to position 1, 2 or 3. Press the Manual button to toggle whether that output relay is disabled while Park Kill is active. LED on means that relay will be off. E.g: if LED for slide position 3 is on, Slide Switch Level 3 Output will be disabled; Level 1 & 2 outputs can still be on when slider is in position 3.
4. Repeat step 3 as needed.
5. Press the Radio Rebroadcast button to exit programming mode.

TONE PROGRAMMING:

1. Press and hold “buttons” “2” and “7” for 2 seconds until Slide switch LEDs 1,2, and 3 flash
2. Press Control Selected to be programmed (Wail, Yelp, Tone, Manual, or Horn). Auxillary button 1 = HORN, button 2 = MANUAL
3. Auxillary buttons 5-8 will determine which tone is to be played when the user presses the button.
4. Repeat steps 2 and 3 for each tone button

MANUAL BUTTON TONE DURATION

MOMENTARY: When played solo

LATCHED: When played over other tones.

CONTROL PANEL
PNGCP18003
PNGCP18004
PROGRAMMING MANUAL

WAIL BUTTON

BUTTON #6	BUTTON #7	BUTTON #8	SPKR A	SPKR B
OFF	OFF	OFF	WAIL 1	WAIL 1
OFF	OFF	ON	WAIL 2	WAIL 2
OFF	ON	OFF	WAIL 1	WAIL 2
OFF	ON	ON	WAIL 1	YELP 1
ON	OFF	OFF	WAIL 1	ALERT A
ON	OFF	ON	WAIL 1	HiLo
ON	ON	OFF	WAIL 2	SUPER HiLo
ON	ON	ON	WAIL 2	PIERCER

*TONE SCROLL

SPKR A	SPKR B
WAIL 1	WAIL 2
WAIL 2	YELP 1
YELP 1	YELP 2
YELP 2	PIERCER
PIERCER	ALERT A
ALERT A	WAIL 1

TONE BUTTON

BUTTON #5	BUTTON #6	BUTTON #7	BUTTON #8	SPKR A	SPKR B
OFF	OFF	OFF	OFF	TONE SCROLL*	TONE SCROLL*
OFF	OFF	OFF	ON	PIERCER	PIERCER
OFF	OFF	ON	OFF	HiLo	HiLo
OFF	OFF	ON	ON	SUPER HiLo	SUPER HiLo
OFF	ON	OFF	OFF	ALERT A	ALERT A
OFF	ON	OFF	ON	ALERT A	HiLo
OFF	ON	ON	OFF	ALERT A	SUPER HiLo
OFF	ON	ON	ON	HiLo	SUPER HiLo
ON	OFF	OFF	OFF	HiLo	PIERCER
ON	OFF	OFF	ON	ALERT A	ALERT B
ON	OFF	ON	OFF	PIERCER	YELP 1
ON	OFF	ON	ON	PIERCER	WAIL 1
ON	ON	OFF	OFF	SUPER HiLo	PIERCER
ON	ON	OFF	ON	WAIL 1	WAIL 2
ON	ON	ON	OFF	YELP 1	YELP 2
ON	ON	ON	ON	WAIL 1	YELP 1

HORN BUTTON

BUTTON #1	BUTTON #5	BUTTON #6	BUTTON #7	BUTTON #8	SPKR A	SPKR B
ON	OFF	OFF	OFF	OFF	HORN 1	HORN 1
ON	OFF	OFF	OFF	ON	HORN 2	HORN 2
ON	OFF	OFF	ON	OFF	HORN 3	HORN 3
ON	OFF	OFF	ON	ON	HORN 4	HORN 4
ON	OFF	ON	OFF	OFF	HORN 1	HORN 2
ON	OFF	ON	OFF	ON	HORN 1	HORN 3
ON	OFF	ON	ON	OFF	HORN 1	HORN 4
ON	OFF	ON	ON	ON	HORN 2	HORN 3
ON	ON	OFF	OFF	OFF	HORN 2	HORN 4
ON	ON	OFF	OFF	ON	HORN 3	HORN 4
ON	ON	OFF	ON	OFF	HORN 1	WAIL 1
ON	ON	OFF	ON	ON	HORN 1	YELP 1
ON	ON	ON	OFF	OFF	HORN 1	PIERCER
ON	ON	ON	OFF	ON	HORN 2	YELP 1
ON	ON	ON	ON	OFF	HORN 3	YELP 1
ON	ON	ON	ON	ON	HORN 4	SUPER HiLo

YELP BUTTON

BUTTON #6	BUTTON #7	BUTTON #8	SPKR A	SPKR B
OFF	OFF	OFF	YELP 1	YELP 1
OFF	OFF	ON	YELP 2	YELP 2
OFF	ON	OFF	YELP 1	YELP 2
OFF	ON	ON	YELP 1	WAIL 1
ON	OFF	OFF	YELP 1	PIERCER
ON	OFF	ON	YELP 1	HiLo
ON	ON	OFF	YELP 2	SUPER HiLo
ON	ON	ON	YELP 2	PIERCER

MANUAL BUTTON (SOLO PLAY ONLY)

BUTTON #2	BUTTON #6	BUTTON #7	BUTTON #8	SPKR A/B
ON	OFF	OFF	OFF	WAIL 1 FREQUENCY DECREASE WHEN RELEASED
ON	OFF	OFF	ON	WAIL 1 IMMEDIATE OFF WHEN RELEASED
ON	OFF	ON	OFF	YELP 1
ON	OFF	ON	ON	PIERCER
ON	ON	OFF	OFF	ALERT A
ON	ON	OFF	ON	HiLo
ON	ON	ON	OFF	SUPER HiLo

Denotes Factory Default Setting

MANUAL BUTTON TONE DURATION

MOMENTARY: When played solo

LATCHED: When played over other tones.